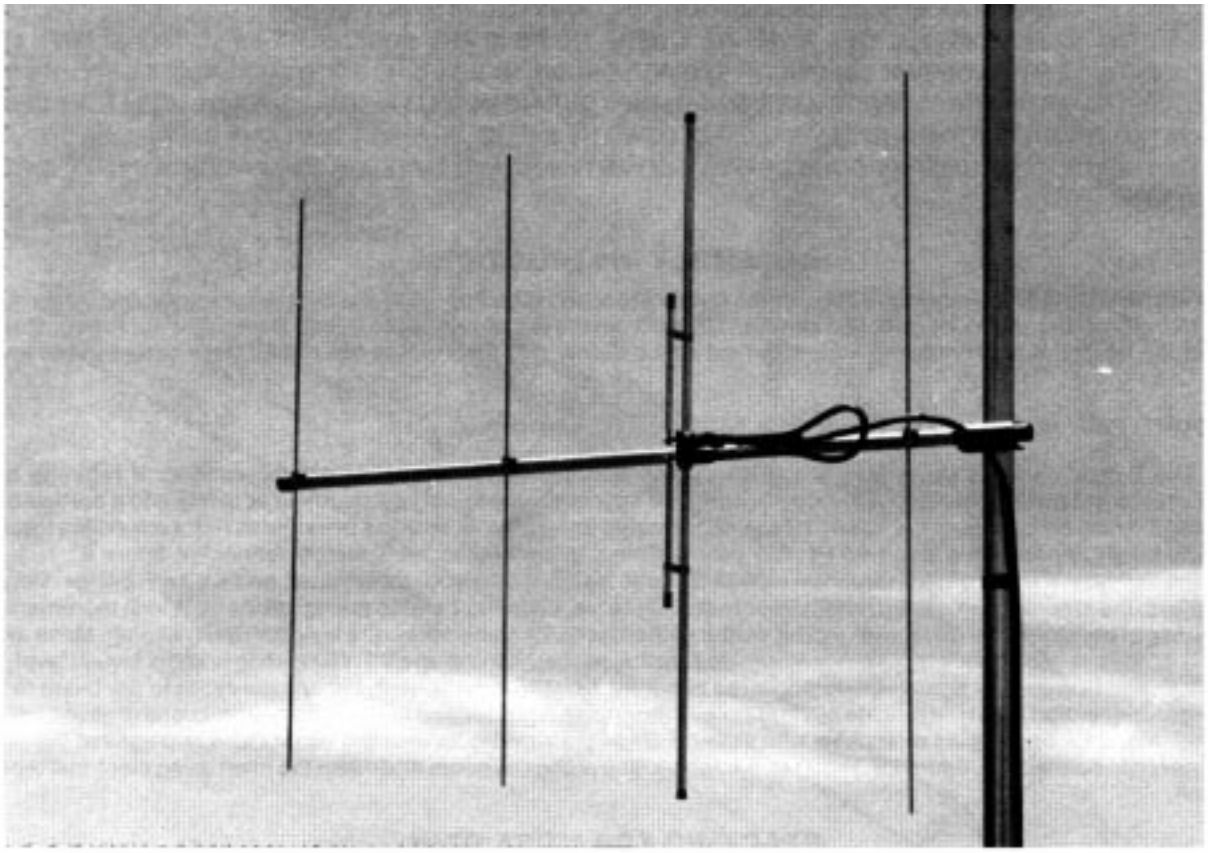

124WB BOOMER
4 ELEMENT BROADBAND
2 METER YAGI

cushcraft
CORPORATION

951338(8/86)

INSTALLATION SUGGESTIONS

Your Cushcraft VHF beam is designed and manufactured to give top performance and trouble free service. The antenna will perform as specified if the instructions and suggestions are followed, and if care is used in assembly and installation.

MAST: The antenna may be mounted on any mast diameter up to 2" (5.1cm)

MOUNTING: When installing more than one beam on the same mast, the spacing between adjacent antennas should be one half wavelength of the lower frequency. Generally, it is best to locate the lowest frequency antenna at the bottom of the mast.

LOCATION: of the antenna is very important. Surrounding objects such as trees, power lines, other antennas, etc. will seriously reduce efficiency. To minimize the effects of surrounding objects, mount the antenna as high and in the clear as possible. If metal guy wires are used, they should be broken with strain insulators.

WARNING: THIS ANTENNA IS AN ELECTRICAL CONDUCTOR. CONTACT WITH POWER LINES CAN RESULT IN DEATH, OR SERIOUS INJURY. DO NOT INSTALL THIS ANTENNA WHERE THERE IS ANY POSSIBILITY OF CONTACT WITH OR HIGH VOLTAGE ARC-OVER FROM POWER CABLES OR SERVICE DROPS TO BUILDINGS. THE ANTENNA, SUPPORTING MAST AND/OR TOWER MUST NOT BE CLOSE TO ANY POWER LINES DURING INSTALLATION-REMOVAL OR IN THE EVENT PART OF THE SYSTEM SHOULD ACCIDENTALLY FALL. FOLLOW THE GUIDELINES FOR ANTENNA INSTALLATIONS RECOMMENDED BY THE U.S. CONSUMER PRODUCT SAFETY COMMISSION AND LISTED IN THE PAMPHLET THAT CAME WITH YOUR ANTENNA.

ASSEMBLY INSTRUCTIONS

ELEMENT ASSEMBLY: The elements except for the dipole are taped together. They are progressively shorter from reflector to directors. Using fig. 1 mount the longest element 7" (17.8cm) from the u-bolt end of the boom. Next using fig. 2 mount the dipole. Now mount the longer of the remaining elements next to the dipole and then mount the remaining element at the end of the boom.

MAST MOUNT: Refer to figure 3 and mount the u-bolt to the boom and mast.

TUNING: The T match should be set at 6⅜" (16.19cm) for 50-ohms and full 2 meter band operation. If retuning becomes necessary use a good quality standing wave ratio bridge. It is not necessary to cut your feedline or prune it to a particular length; any length cable may be used with the beam. However, the cable should be as short as possible to reduce feedline losses. Your cable should be equipped with a standard PL-259 coaxial fitting, to connect to the T match connector, figure 2.

Tune the antenna at your center frequency; using a 50-ohm feedline from your transmitter, and a VSWR bridge. Connect the VSWR bridge to the antenna with a short length 50 ohm coaxial cable. Slide the T match tuning straps by ⅛ inch increments, keeping the spacing of the straps the same each side of center of the dipole, until you obtain the lowest VSWR reading. Move away from the antenna each time you check the VSWR reading. Repeat this procedure until the VSWR reading is at the lowest level. Disconnect the cable and bridge, and tighten the tuning strap securely. Use the vinyl boot on the coaxial cable to the beam to insure a weather proof connection. Coat the outside of the aluminum connector threads and the PL-259s with silicone grease provided. Do not coat the connector center pins or sockets with silicone. Slide the vinyl boots over the connectors and against the plate for a good weather tight connection, figure 2B. Run the coaxial feedline along the boom and down the mast using electrical tape to hold it in position.

STACKING FOR MORE GAIN

Two 124WB beams may be stacked for 3 dB gain increase using the PD2 power divider and equal lengths of 50 ohm coaxial cable to each antenna.

SPACING: E plane 72" (182.9cm), H plane 56" (142.2cm). See figure 5, on back page.

ELEMENT ASSEMBLY

P/N	KEY	DISPLAY	DESC.	SIZE	QTY
010010	10		Lock Washer	#8	6
010011	11		Hex Nut	#8-32	3
010120	120		Machine Screw	#8-32 × 2" (5.08cm)	3
190026	26		Alum Half Washer	1" (2.54cm)	3
190028	28		Aluminum Bracket	⅞" (2.22cm)	3

ELEMENT CHART

ELEMENT	LENGTH
E1	40¾" (103.5cm)
E2	38⅝" (98.11cm)
E3	36 11/16" (93.19cm)
E4	34" (86.36cm)

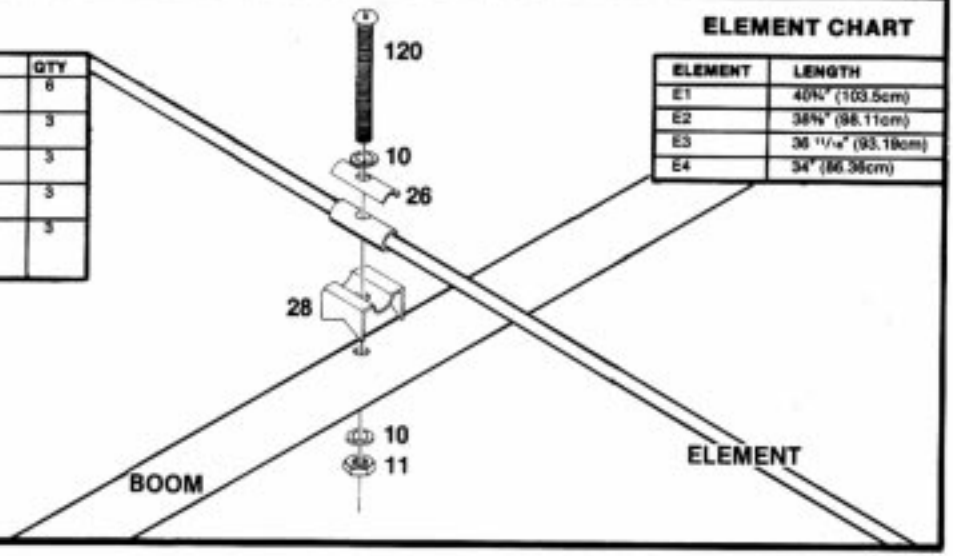

FIGURE 1

DRIVEN ELEMENT ASSEMBLY

P/N	KEY	DISPLAY	DESC.	SIZE	QTY
010010	10		Lock Washer	#8	9
010011	11		Hex Nut	#8-32	8
010120	120		Machine Screw	#8-32 × 2" (5.08cm)	1
010079	79		Machine Screw	#8-32 × ½" (1.27cm)	4
190026	26		Aluminum Bracket	⅞" (2.22cm)	1
200125	125		Tuning Strap	⅜" (.95cm)	2
190124	124		Connector Strap	1 7/16" (3.65cm)	1
050077	77		Plastic Cap	⅜" (.95cm)	2
050053	53		Plastic Cap	½" (1.27cm)	2
	BN		Coaxial Balun	RG-11, 24" (60.96cm)	1
	DC		Connector Bracket	2 × 2¼" (5.08 × 5.72cm)	1
	ET		T-Match Tube	⅜" × 8½" (.95 × 21.6cm)	2
	ED		Driven Element	½" × 38⅝" (1.27 × 98.11cm)	1
050115	115		Vinyl Boot		1
240116	116		Silicone Package		2
290326	326		Danger Label		1

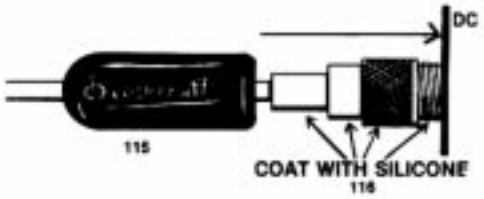
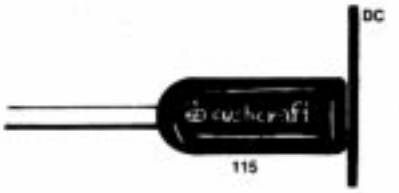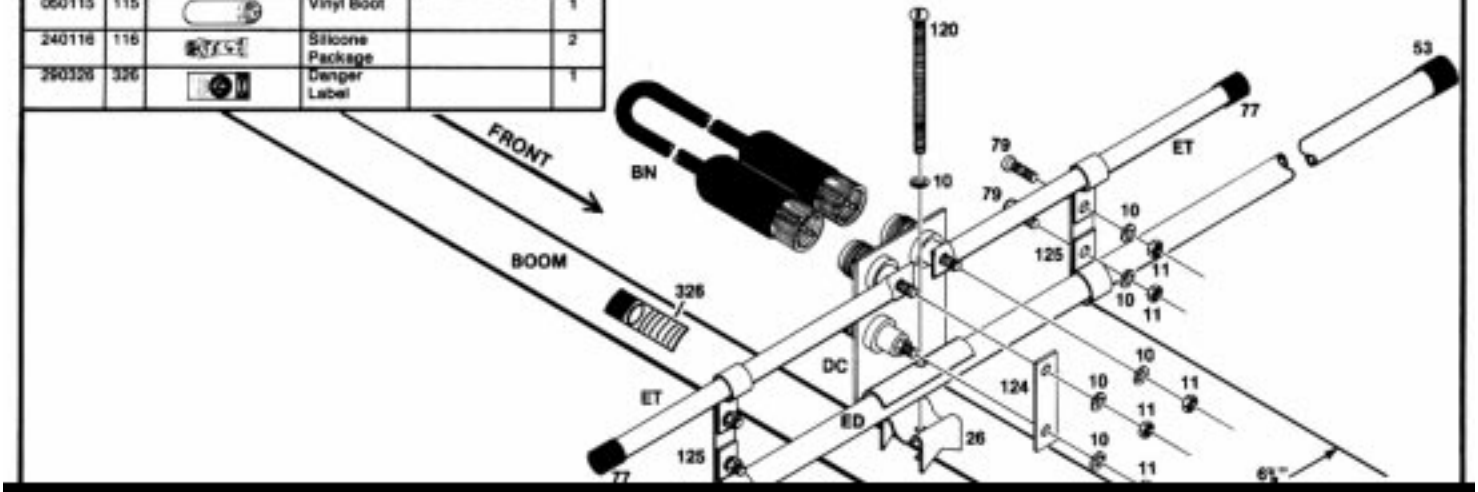
FIGURE 2B